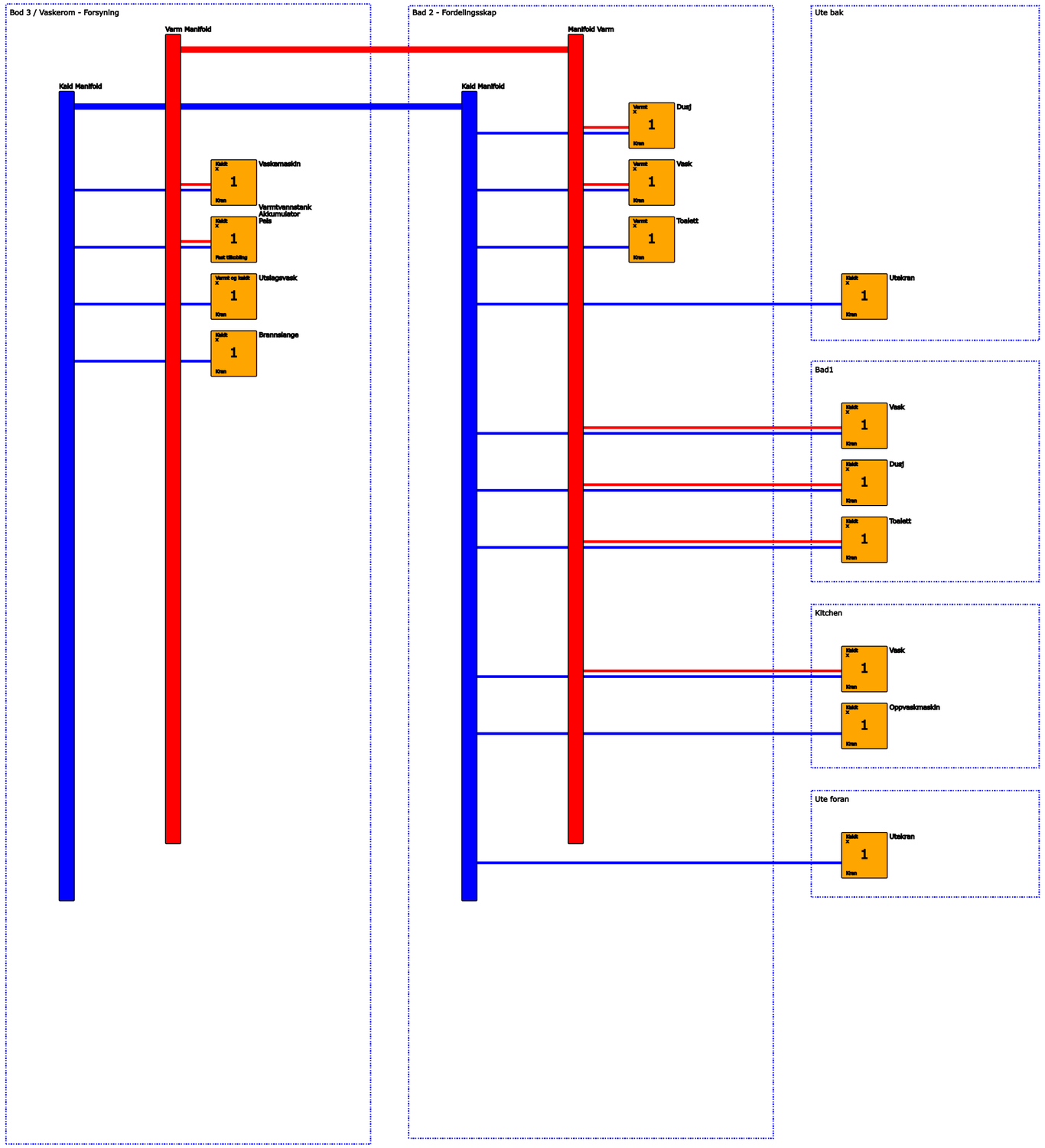

Dwg. No.	Description

Rev.	Date	Description	Drwn	Chkd	Appd
1	21.12.22	Issued for information	HKO	HKO	HKO

1 8 3

PLANT: Nattlandsfjellet 183

PROJECT NAME: R1

PO. NO.: -

AREA/LOCATION: N00

FORMAT: LANDSCAPE

SCALE: A3

ORIGINATOR DRW. NO.: NA

ORIGINATOR NAME:

DRAWING TITLE: Topology New
Hot and Cold Water Supply

DRAWING NO.: 183-W031

REV NO.: 1

Print date: January 03, 2023 - 0058